User Manual

Thank you for purchasing the Valkyrie from the Valkyrie series. The **iDSD Valkyrie** is a balanced USB and Bluetooth Ultra-Res DAC + headphone amplifier.

FEATURES

Digital

- Quad-stack DAC – 4x DACs in interleaved configuration enables exceptional resolution
- Studio grade Crysopeia FPGA Remastering Engine to up convert PCM and DSD files to DSD512 or DSD1024
- 8 selectable digital filters including JVCKENWOOD's K2HD Technology
- Equipped with Qualcomm's flagship QCC5181 chip featuring Bluetooth 5.4, supports the latest aptX Lossless codec capable of streaming lossless CD-quality audio without sacrificing quality
- Ultra-res digital audio – 32-bit/768kHz PCM, DSD512
- Power delivery compatible with QC3.0 support at 20V, and QC2.0 support at 5-12V

Analogue

- Astonishing 5,700mW of power (max.) – drives the toughest headphone loads with consummate ease
- Custom bias, EQ and amp circuits for next generation xMEMS headphone driver technology
- XSpace, XBassII, and XPresence – adjust soundstage and frequency response to match your headphones
- Three power modes: Normal, Turbo for low-sensitivity headphones, and Nitro for the most demanding headphones with a 19.6V max output
- iEMatch optimises output to suit high-sensitivity in-ear monitors
- Top-grade audiophile circuit components deliver exceptional sonic purity

General

- Multiple operational modes – pure DAC, DAC/headphone amp, and preamplifier
- Separated digital and analogue PCBs for minimal crosstalk
- Powered by battery or mains – iPower power supply with Active Noise Cancellation included
- High-capacity 21700 lithium-ion battery configuration provides up to 18 hours of playtime despite extreme amp power

- iFi Nexis compatible for wireless OTA firmware updates
- Supplied with custom-made travel case and Nordic engraved presentation box

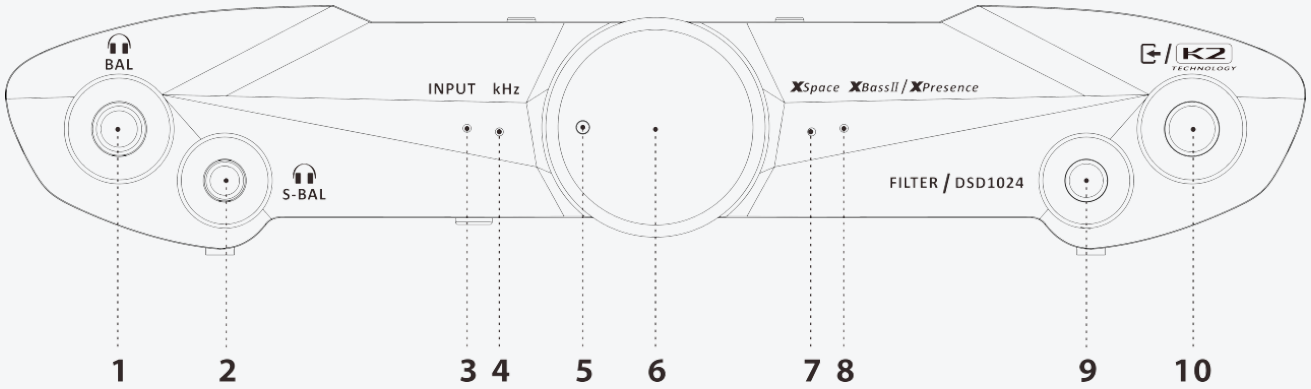

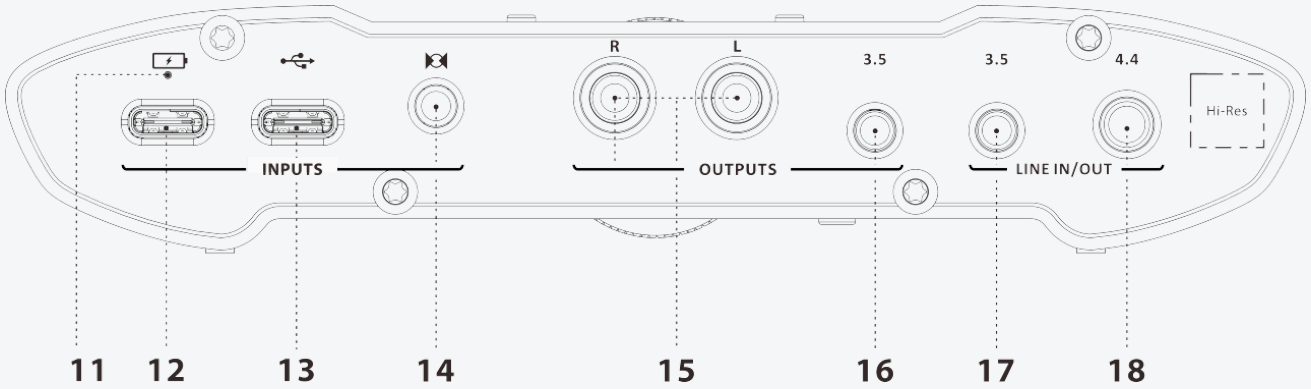

VALKYRIE
XSpace/MODE
XBassII/XPresence/
19
20
21

Contents

1. Balanced 4.4mm and xMEMS headphone output

I) Balanced 4.4mm

II) xMEMS mode

2. S-Balanced 3.5mm headphone output

3. Input mode LED

4. Audio Format LED (kHz)

5. Volume LED

6. Multi-function Dial

   I) Power On/Off

   II) Analogue volume control

   III) Mute/Unmute

   IV) Forced Shutdown

7. XSpace Matrix LED

8. XBass II and XPresence LED

9. Filters and DSD1024

   I) Filters (PCM - Upsampling)

   II) DSD1024 (DSD - Remastering)

10. Input selector/K2HD Technology

   I) Input selector (Short press ≤ 1s)

   II) 'K2HD Technology'

11. Battery Status LED

12. USB-C battery charge input

13. USB-C audio and power input

14. S/PDIF (Optical/Coaxial) input

15. RCA line output

16. Single-Ended 3.5mm line output

17. Single-Ended 3.5mm line input/output

18. Single-Ended 4.4mm line input/balanced output

19. XSpace Matrix On/Off and Power mode selection

I) XSpace Matrix On/Off (short press ≤ 1s)

II) Power mode (long press ≤ 3s)

20. TFT Display

21. XBass II, XPresence and Menu settings

I) XBass II and XPresence settings (short press ≤1s)

II) Menu settings (long press ≥ 3s)

I) DSD Remastering

II) xMEMS

III) Brightness

IV) Volume Sync

V) BT Pairing

VI) BT Voice Prompt

VII) Dual Port Charging

VIII) Active Outputs

IX) Auto Power-Off

X) Battery Health Mode

XI) Factory Reset

XII) Info

22. iEMatch switch

23. Device Lock

Set up your iDSD Valkyrie using our iFi Nexis App

Cautions

Prolonged Heat Exposure

Specifications

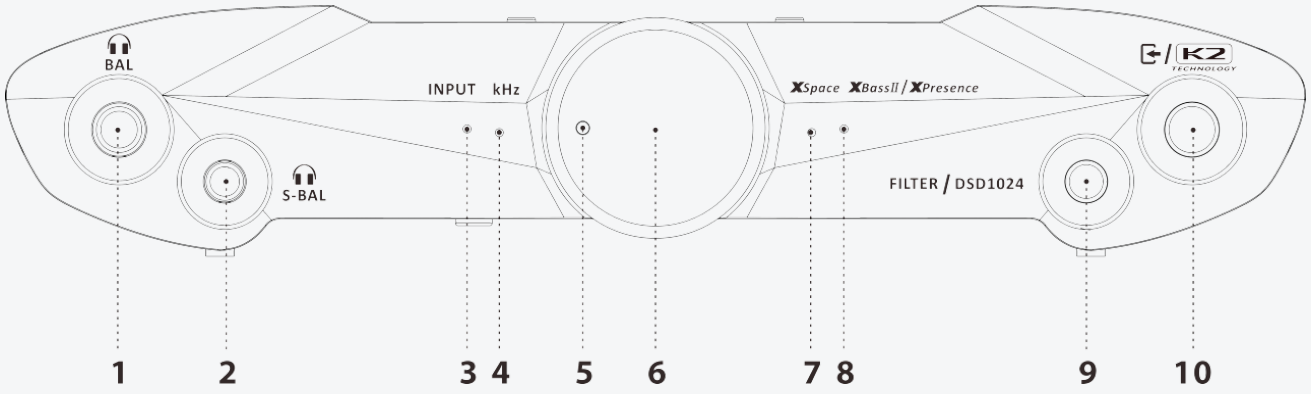

1. Balanced 4.4mm and xMEMS headphone output

I) Balanced 4.4mm

Connection 4.4mm balanced headphones.

Tip: If possible, use balanced headphones to take full advantage of the true balanced nature of the iDSD Valkyrie circuitry.

II) xMEMS mode

The xMEMS mode is designed for xMEMS headphones. To use xMEMS headphones, switch on the dedicated xMEMS mode; see section (21) xMEMS.

Tip: xMEMS transducers are a piezoelectric technology that have specific drive requirements, and can only be used when xMEMS mode is on.

Warning: With xMEMS mode on, please connect xMEMS IEMs to the balanced 4.4mm headphone output only (1). It is not recommended to connect other types of headphones while xMEMS mode is on. To connect those, please turn off the xMEMS mode before connecting.

Tip: If the mode is used incorrectly - such as plugging xMEMS headphones into the balanced 4.4mm headphone port when xMEMS mode is not turned on, or plugging regular balanced 4.4mm headphones into the balanced 4.4mm headphone port when xMEMS mode is turned on - we have implemented advanced circuit protection, protecting the headphones from damage but resulting in distorted sound.

2. S-Balanced 3.5mm headphone output

Connect 3.5mm headphones (compatible with standard TRS configuration).

3. Input mode LED

The LED colour scheme shows the current input mode of the iDSD Valkyrie (see (10) for input channel switching options). The display screen (20) simultaneously displays the current input mode icon.

LED	Input
Magenta	USB
Blue	Wireless Bluetooth (Connected)
Blue/Red (flashing)	Wireless Bluetooth (Awaiting connection)
Blue (flashing)	Wireless Bluetooth (Pairing)

Green	S/PDIF (Coaxial/Optical)
Yellow	Line (SE 4.4mm/3.5mm)

4. Audio Format LED (kHz)

The LED colour scheme indicates the audio format and sampling frequency received by the iDSD Valkyrie from the music source. The display screen (20) simultaneously displays the current audio format and sampling frequency.

LED	Mode
Yellow	PCM 48/44.1kHz
White	PCM 768/705.6/384/352.8/192/176.4/96/88.2kHz
Cyan	DSD 128/64
Red	DSD 1024/512/256

5. Volume LED

The LED colour scheme indicates the current volume level of iDSD Valkyrie. The display screen (20) simultaneously displays the volume.

LED	Volume

Off	Mute
Blue	Mute to 21
Magenta	22 to 41
Cyan	42 to 61
Green	62 to 79
Yellow	80 to 97
Red	98 to 100

6. Multi-function Dial

Controls:

- Power On/Off
- Analogue volume control
- Mute/Unmute
- Forced shutdown

I) Power On/Off

Short press dial for 2s to switch on, long press dial for 3s to switch off.

II) Analogue volume control

Turn the dial to control the volume. The analogue volume control in the iDSD Valkyrie is audibly superior to any digital volume control.

Warning: Due to the high power of iDSD Valkyrie, always start off at a low volume level so that there is no risk of damage to your headphones and your hearing. iFi audio is not responsible for any hearing or equipment damage from misuse.

III) Mute/Unmute

Short press the dial to Mute/Unmute.

Tip: Mute mode cannot be cancelled by turning the volume control dial after a short press to mute, it can only be cancelled by short pressing the volume control dial again.

IV) Forced Shutdown

If the device becomes unresponsive (no feedback for any operation), long press the dial for ≥10s; the iDSD Valkyrie will force a shutdown. The device needs to be manually rebooted after this shutdown.

7. XSpace Matrix LED

Switch the **XSpace** Matrix on/off by short press (19). The **XSpace** LED lights up to indicate that the iDSD Valkyrie has enabled the XSpace holographic sound field (See 19).

8. XBass II and XPresence LED

Short press (21) to turn on/select/off **XBass II and XPresence.** The **XBass II and XPresence** LED lights up to indicate that the **XBass II or XPresence** mode is enabled (See 21).

9. Filters and DSD1024

I) Filters (PCM - Upsampling)

The Valkyrie has a comprehensive suite of digital filters. With certain filters engaged, PCM content may be up-converted to a maximum of 16x the original rate, to 705.6/768kHz.

Short press the button to cycle through the following 6 digital filters. The display will show the corresponding digital filter information (20), users can freely select different digital filter modes:

Filters	Features
Bit-Perfect	No digital filtering, no pre or post-ringing
GTO (Gibbs Transient-Optimised)	Up-sampled to 352.8/384kHz, minimum filtering, no pre-ringing, minimum post-ringing
Apodising	Modest filtering, no pre-ringing, modest post ringing, 128 taps
Transient Aligned	Max filtering, max pre-ringing, maximum post-ringing, 16,384 taps

Standard	Modest filtering, modest pre and post-ringing
Minimum	Minimum phase, slow roll-off, minimum pre and post-ringing

Note: If the GTO filter is selected, the only sample rate indicator showing will be 352.8/384kHz, indicating the upsampling operation of this filter. When both K2HD mode and GTO filter are enabled, the sampling frequency of GTO is 192kHz.

II) DSD1024 (DSD - Remastering)

Long press the button to select between the following options. You can also enable DSD Remastering through the menu:

Off > DSD512 > DSD1024 > DSD2048

When enabled, incoming audio (excluding DSD512) is converted to either DSD512 or DSD1024, based on the user's selection, along with their chosen digital filter. This includes the Bit-Perfect filter (which by definition, applies no digital filtering).

All these digital processing options apply to all digital input sources, including USB, BT (Bluetooth), and S/PDIF (Coaxial/Optical) inputs.

Digital inputs other than USB are currently limited to maximum sample rates of 192kHz PCM and DSD64 via DoP.

Please try all the different options to see which you enjoy the most.

10. Input selector/K2HD Technology

I) Input selector (Short press ≤ 1s)

Use the buttons to select between the following input options. The display (20) will show the corresponding signal input mode icon, and the INPUT LED (5) will show the corresponding colour:

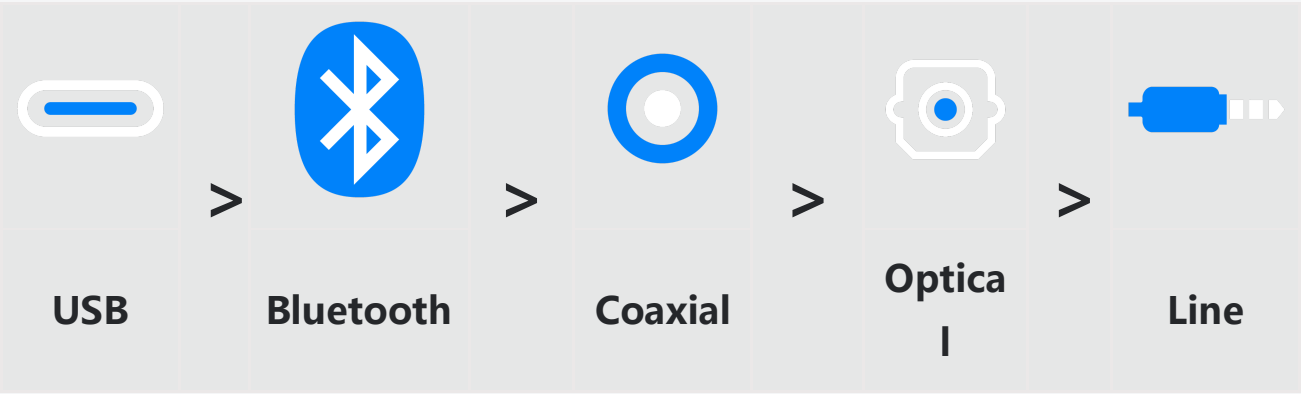

Note: Please select the input channel according to your audio source. For example, when using USB input, you need to switch the input channel to "USB".

II) 'K2HD Technology'

The Valkyrie incorporates JVCKENWOOD's K2HD Technology, designed to enhance sound quality by restoring altered or degraded digital audio. This processing brings the sound closer to the quality of the original master recording.

Long press the button to select between the following options:

Off > K2 TECHNOLOGY > K2 HD

K2 Mode	Features
K2 TECHNOLOGY	Collective term for JVCKENWOOD's K2 Technology, used here to denote K2 technology processing without up-sampling. The audio file format supported by 'K2' mode is PCM, sampling frequency 44.1~96kHz, when the audio file format > PCM 96kHz, 'K2' mode is not applicable, and it will be switched to 'K2HD' mode automatically.
K2 HD	The audio file format supported by 'K2HD' mode is PCM with sampling frequency 44.1~192kHz, and it can up-convert audio files ≤ PCM 176.4kHz to 176.4/192kHz. 'K2HD' mode is not compatible with native DSD audio file format, “K2HD” mode cannot be enabled when the audio file format played is in DSD format. 'K2HD' mode = K2+DSD upscaling/GTO upscaling

Tip: When K2 mode is enabled, it will automatically switch to K2HD mode when the audio sample rate played is >96kHz; when the audio sample rate played is ≤96kHz, it will automatically resume 'K2' mode.

Tip: 'K2HD' mode supports GTO digital filter and DSD upsampling only. When K2HD mode and GTO filter are enabled at the same time, the sampling frequency of GTO filter is 176.4/192kHz, and when the playback audio

sampling rate ＞176.4/192kHz, the digital filter will automatically switch to Bit-Perfect and disable 'K2HD' mode automatically. When K2HD mode is not enabled, the sampling frequency of GTO filter is 352.8/384kHz.

When 'K2' mode and GTO filter or DSD upscaling are enabled at the same time, 'K2' mode will be automatically switched to 'K2HD' mode, and the sample rate of the audio played back will be higher than 176.4/192kHz. When the playback audio sample rate is >176.4/192kHz, 'K2HD' mode is automatically turned off; when the playback audio sample rate is ≤176.4k/192Hz, 'K2HD' mode is automatically restored.

**"K2 TECHNOLOGY" and "K2HD" are trademarks or registered trademarks of JVCKENWOOD Corporation."*

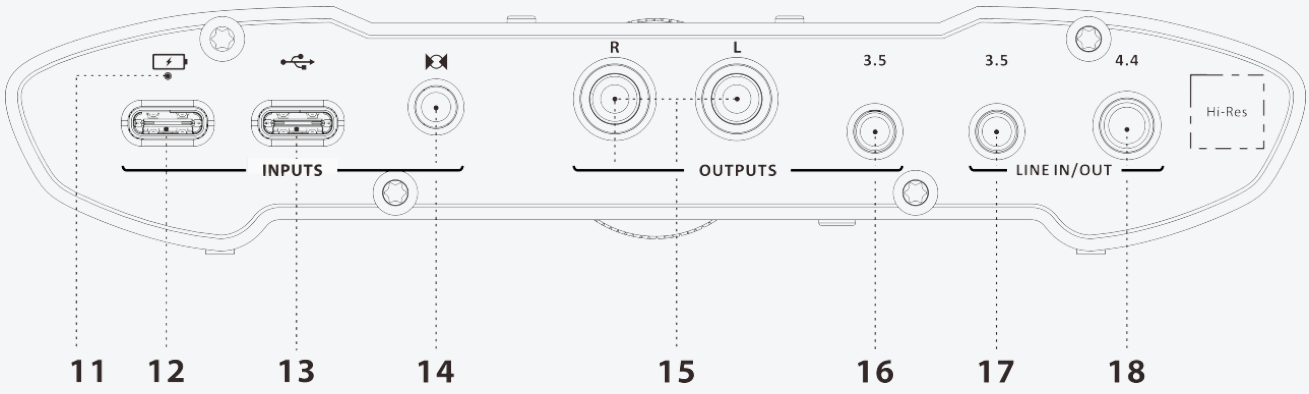

11. Battery Status LED

LED	Status
Green*	80%-100%
Orange	26%-79%

Red	≤25%

**Battery LED will flash when charging.*

12. USB-C battery charge input

The Valkyrie supports PD/QC3.0 charging at 20V, or QC2.0 fast charging at 5V, 9V, or 12V. Due to its high power requirements, it will take ~8 hours to fully charge with a standard charger, or ~2.5 hours with a high-powered charger. Use the included USB 'Type A' to 'Type C' cable, a smart charger, or any regular charger up to 24V.

Tip: When charging from an external power source in the power-on state, if the battery level is <90%, the iDSD Valkyrie will be powered by the external power source and charge the battery at the same time; if the battery level is full or after the battery is fully charged, the iDSD Valkyrie will automatically switch to the battery power source.

When Battery Healthy Charging Mode (21-II-X) is enabled, the iDSD Valkyrie will be powered by the external power source when it is connected to an external power source. To switch to battery power, disconnect the external power source or turn off the Battery Healthy Charging Mode.

Tip: When the iDSD Valkyrie is off and a USB power supply is detected, the LED (11) will change colour to show the various states of charge.

Tip: We recommend charging the iDSD Valkyrie when it is switched off. It will take longer to charge the Valkyrie when in use (listening to music), depending on the headphones used and the volume level. The chassis may get warm to the touch when charging whilst in active use; this is normal, do not worry.

13. USB-C audio and power input

This is the USB-C input mainly used for data signal transmission. There are two states which can be set via the 'Dual Port Charging' option in the menu:

Mode	Status
OFF	This port is for data input only.
ON	This port can be used for charging in addition to the charging port (12).

Note: When the 'dual port charging' function is enabled via the menu, the USB-C audio input will also charge the device, but the charging current will be limited. For faster charging, it is recommended to use the dedicated USB-C battery charge (12) port.

Note: When in dual charge mode, more than 5.7V input to this input will automatically engage overvoltage protection, and it will not charge.

Note: For use with PC it is necessary to download iFi's Windows drivers.

Tip: For all latest firmware updates please refer to our website here: https://downloads.ifi-audio.com/support/download-hub/

14. S/PDIF (Optical/Coaxial) input

Connect a S/PDIF source such as Apple TV, Google Chromecast, PS5, Xbox, a high-end CD transport, etc.

Note: To connect to the Valkyrie via a S/PDIF coaxial connection, use a 3.5mm TS jack (Tip - Signal; Sleeve - GND).

15. RCA line output

This is a variable-level analogue output via RCA > RCA or other single-ended interconnects. You can use this to connect to active speakers or amplifiers.

Tip: In 'Headphones + Line Out' mode, both the line and headphone outputs stat active simultaneously To disable the headphone outputs, change the Active Outputs to 'Headphones or Line Out', and unplug your headphones.

16. Single-Ended 3.5mm line output

This is a variable-level analogue output via 3.5mm > 3.5mm or other single-ended interconnects. You can use this to connect to active speakers or amplifiers.

Tip: In 'Headphones + Line Out' mode, both the line and headphone outputs stat active simultaneously To disable the headphone outputs, change the Active Outputs to 'Headphones or Line Out', and unplug your headphones.

17. Single-Ended 3.5mm line input/output

This is a fixed-level, Single-Ended 3.5mm connection. Input and output are supported:

Mode	Status
Output	When the input mode is USB, Bluetooth or S/PDIF (Optical/Coaxial)
Input	When the input mode is Line

Tip: Since the rear socket is in parallel with the DAC section output, it is recommended to disconnect any cables connected to the line inputs when using the Valkyrie as a DAC - otherwise, it may distort the DAC playback.

Warning: The volume level is fixed from this 3.5mm port. The volume control and headphone amp settings have no influence on it. Do not insert 3.5mm headphones to this source as the full volume is likely to damage your headphones or your hearing.

18. Single-Ended 4.4mm line input/balanced output

This is a fixed-level, Pentaconn 4.4mm connection. Input and output are supported:

Mode	Status
Output	When the input mode is USB, Bluetooth or S/PDIF (Optical/Coaxial)
Input	When the input mode is Line

Tip: Since the rear socket is in parallel with the DAC section output, it is recommended to disconnect any cables connected to the line inputs when using the Valkyrie as a DAC - otherwise, it may distort the DAC playback.

Tip: The input impedance as a line input is very low when in xMEMS mode. Please use an analogue source with low impedance output <10 ohms when in xMEMS mode. During playback from a digital source using USB, S/PDIF or Bluetooth (ie. when in line output mode), please unplug your analogue source.

Warning: The volume level is fixed from this 4.4mm port. The volume control and headphone amp settings have no influence on it. Do not insert 4.4mm headphones to this source as the full volume is likely to damage your headphones or your hearing.

19. XSpace Matrix On/Off and Power mode selection

I) XSpace Matrix On/Off (short press ≤ 1s)

A short press of the button (≤ 1s) switches the **XSpace** Matrix on/off and reproduces a holographic sound field. The display (20) will show the corresponding icon and the **XSpace** LED (7) will light up.

It is a purely analogue signal processing circuit designed for listening to headphones as if one was listening to speakers. This addresses the 'music inside the head' sensation, which can make for uneasy listening.

II) Power mode (long press ≤ 3s)

There are 3 different types of power output levels to drive different headphones - from ultra-sensitive in-ear monitors to the most demanding over-ear headphones.

A long press of the button (≤ 3s) will cycle between the following Power mode options; the display (20) will show the corresponding icon:

Normal (0dB) > **Turbo (+8dB)** > **Nitro (+16dB)**

General mode (Battery life with typical headphones)

Input Mode	Power Mode	Headphone Type	Listening T
Digital	Normal	High-Sensitivity IEMs	Max. 18 h

	Turbo	Medium-Sensitivity	Max. 14 ho
	Nitro	Most Demanding	Max. 8 ho
Analogue	Normal	High-Sensitivity IEMs	Max. 32 ho
	Turbo	Medium-Sensitivity	Max. 24 ho
	Nitro	Most Demanding	Max. 13 ho

xMEMS mode (Battery life with xMEMS headphones)

Input Mode	Power Mode	DC Bias Level	Listening T
Digital			
	Normal	10V	Max. 13 ho

	Turbo	12V	Max. 11 ho
	Nitro	14V	Max. 9 ho
Analogue	Normal	10V	Max. 19 ho
	Turbo	12V	Max. 17 ho
	Nitro	14V	Max. 15 ho

Warning: At the outset do not use excessive gain, otherwise damage to hearing or connected headphones may ensue. AMR/iFi audio is not responsible for any damage/injury from misuse.

20. TFT Display

The TFT display shows the current input channel, sample rate, battery level, volume level, audio format, gain mode, XSpace, XBass, XPresence, 'K2' mode and digital filter.

21. XBass II, XPresence and Menu settings

I) XBass II and XPresence settings (short press ≤1s)

Short press the button (≤ 1s) to select between the following options; the display (20) will show the corresponding icon and the **XBass II and XPresence** LED (8) will light up.

Off	>	XBassII	>	XPresence	>	XBassII + XPresence
OFF		**XBass II**		**XPresence**		**XBass II + XPresence**

XBass II is an analogue circuit designed to 'add back' the lost bass response for more accurate reproduction of the original music.

Note: Research into headphone frequency response showed that a purely flat response may not be correct. Our long present XBass fits the profile of the low-frequency correction required. However, it was also shown that a certain amount of upper midrange boost is needed to give many headphones a more 'natural' sound.

This upper midrange region is usually called the 'presence' region; we have used this term to indicate the upper midrange correction. In the iDSD Valkyrie, there is the option to select only Bass correction, only Presence correction, or both Bass and Presence correction.

Note: Sonically-hindering DSP is NOT used for XBass II, XPresence, nor XSpace matrix systems. They use the highest-quality discrete components and operate purely in the analogue domain. Hence all the clarity and

resolution of the original music is retained.

II) Menu settings (long press ≥ 3s)

Controls:

- DSD Remastering
- xMEMS
- Brightness
- Volume Sync
- BT Pairing
- BT Voice Prompt
- Dual Port Charging
- Active Outputs
- Battery Health Mode
- Auto Power-Off
- Factory Reset
- Info

Note: Rotate the Multi-function Dial to select the function, and short press it to confirm selection or toggle on/off mode. If there is no operation within 10 seconds, the display will return to the home screen.

I) DSD Remastering

Short press the dial to select OFF > DSD512 > DSD1024 Remastering. The default is Off, which can also be set by long pressing (9).

For DSD Remastering instructions, see (9) FILTER (PCM - Upsampling) section.

II) xMEMS

Short press the dial to turn the xMEMS mode on / off. This mode is designed for xMEMS headphones. To use xMEMS headphones, switch on the xMEMS mode. It is off by default (See 1-II).

III) Brightness

Short press the dial to select setting TFT display screen brightness "Soft > Bright > Auto". The default setting is "Bright".

Bright	The display brightness always remains bright.
Soft	The display brightness always remains soft.
Auto	Auto sleep mode. If no operation is performed within 10s, the display will turn off.

IV) Volume Sync

Short press the dial to turn the volume sync on/off. It is off by default.

V) BT Pairing

When Bluetooth input is selected, the INPUT LED (3) will blink blue and search for previously paired devices. If a stored device is not found, it will automatically enter pairing mode and flash blue/red.

Select "PAIR" to pair with your source device via Bluetooth. The input LEDs (3) flash blue/red and the Bluetooth icon on the screen flashes in sync. To pair, find the 'iFi Lossless Audio' Bluetooth device on the source device (e.g. mobile phone).

The iDSD Valkyrie can store up to 8 paired Bluetooth devices. To delete all previously stored devices, please perform a factory reset.

The iDSD Valkyrie receives Bluetooth signals via aptX Lossless, aptX Adaptive, aptX, LDAC, LHDC/HWA, AAC and SBC.

VI) BT Voice Prompt

Short press the dial to turn the Bluetooth voice announcement on/off. It is on by default.

VII) Dual Port Charging

Short press the dial to turn the dual charge on/off. It is off by default. See (13).

VIII) Active Outputs

This mode will determine whether the iDSD Valkyrie's headphone output and analogue line outputs work simultaneously, or independently.

Short press the dial briefly to select ‘Headphones + Line Out’ or ‘Headphones or Line Out’. The default is ‘Headphones + Line Out’.

Headphones or Line Out	When the headphone output ports (1) and (2) are in use, the line output ports (15), (16), (17), and (18) will automatically mute. Similarly, when the line output ports are in use, the headphone outputs will be muted.
Headphones + Line Out	The headphone output ports (1) and (2), and line output ports (15) (16) (17) (18) all output signal at the same time.

Tip: In 'Headphones + Line Out' mode, the multi-function dial, or active speaker/amplifier with volume control controls the headphone (1) (2) or line out port (15) (16) volume.

IX) Auto Power-Off

Short press the dial to turn the Auto Power-Off on/off. It is off by default.

OFF	The iDSD Valkyrie remains turned on until the battery runs out, then it automatically shuts down.
ON	The iDSD Valkyrie will automatically shut down after 20 minutes of being idle (no output signal, or paused/stopped playback).

X) Battery Health Mode

Short press the dial to turn the Battery Health Mode on/off. It is off by default.

When the battery health charging mode is enabled, battery charging stops when the battery charge level is ≥90%. Forced shutdown when the charge level is below 5-10%.

Charge optimisation balances the charging voltage of the battery pack, reducing overcharge and over discharge situations. This helps extend battery life and improve charging efficiency through precise management and intelligent equalisation techniques. It also controls the temperature and voltage during charging to prevent lithium decomposition and overheating to ensure safety.

Note: When the Battery Healthy Charging feature is enabled, it is always effective when charging in the off state or on state.

XI) Factory Reset

Select "Reset" to perform a factory reset. The "RESET..." option will appear on the screen and the device will reboot after a successful operation.

Warning: Factory reset will change the following settings - it deletes all stored Bluetooth pairings; digital filtering will default to BP; Bluetooth voice announcement will be enabled; screen brightness returns to high; input channel returns to USB; volume will set to 74dB; gain will default at 0dB; XBassII, XPresence and XSpace turn off.

XII) Info

View the device name and the current XMOS and IOT version number.

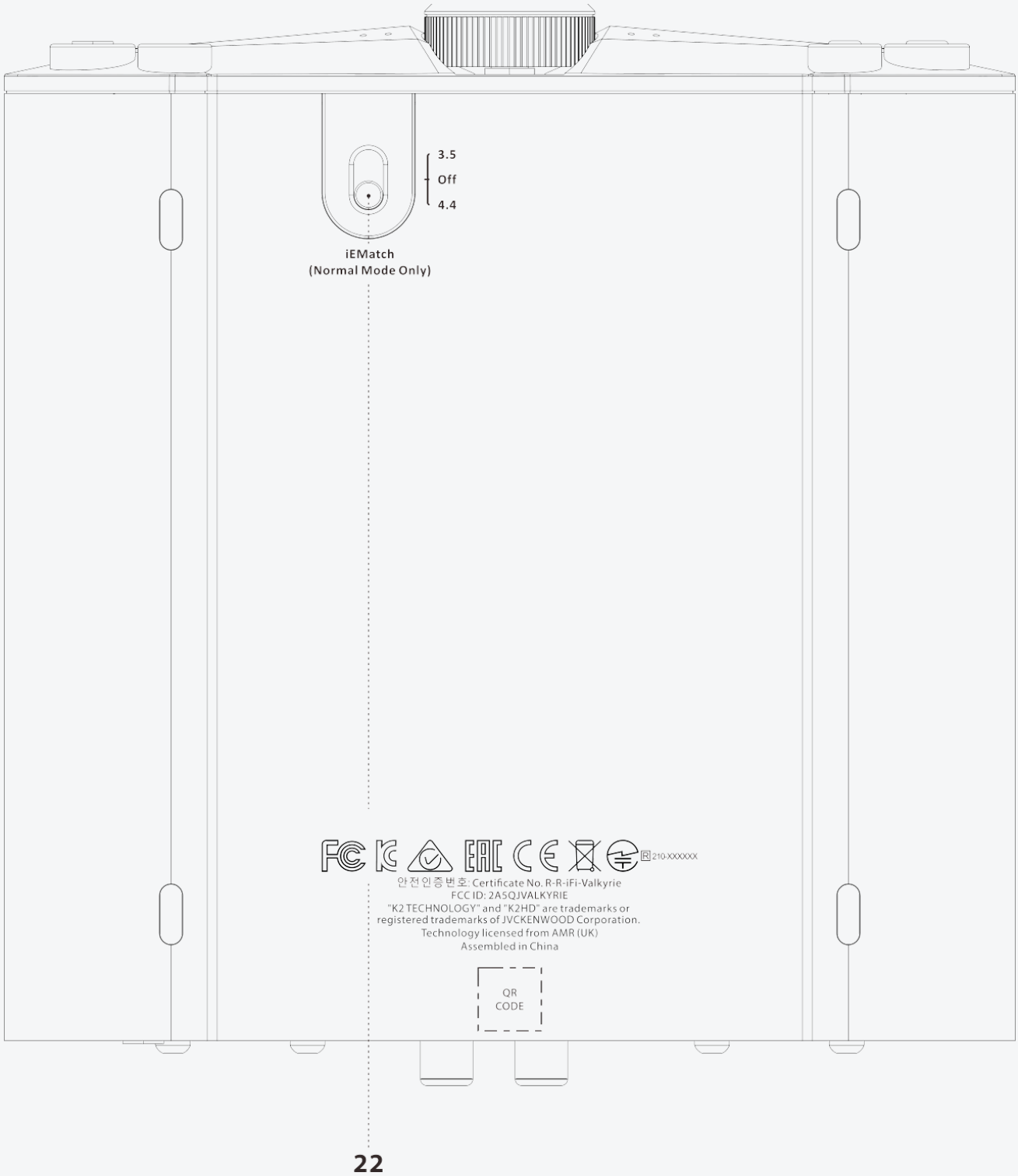

22. iEMatch switch

iEMatch transparently reduces the output level by -12dB, so that even the most sensitive In-Ear-Monitors (IEMs) can be used with the iDSD Valkyrie.

iEMatch can effectively increase the dynamic range of sensitive IEMs by reducing background amplifier hiss.

iEMatch	
3.5	=3.5mm headphones
off	Off
4.4	=4.4mm headphones

Tip: It is recommended to use the 4.4mm setting for 4.4mm headphones and the 3.5mm setting for 3.5mm headphones. Otherwise, the iEMatch function will not work as effectively.

23. Device Lock

The device lock is activated/deactivated by short pressing both the **XSpace** (19) and **XBass II** (21) buttons together. This prevents accidental turning of the volume knob and accidental pressing of the function buttons while travelling or commuting, which can result in sudden volume or setting changes. The display (20) shows the device lock icon.

Tip: When Device Lock is activated, all operations except Forced Shutdown (6-IV) and iEMatch switch (22) are locked out and cannot be operated. If you need to operate the Valkyrie, please switch off the device lock first.

Set up your iDSD Valkyrie using our iFi Nexis App

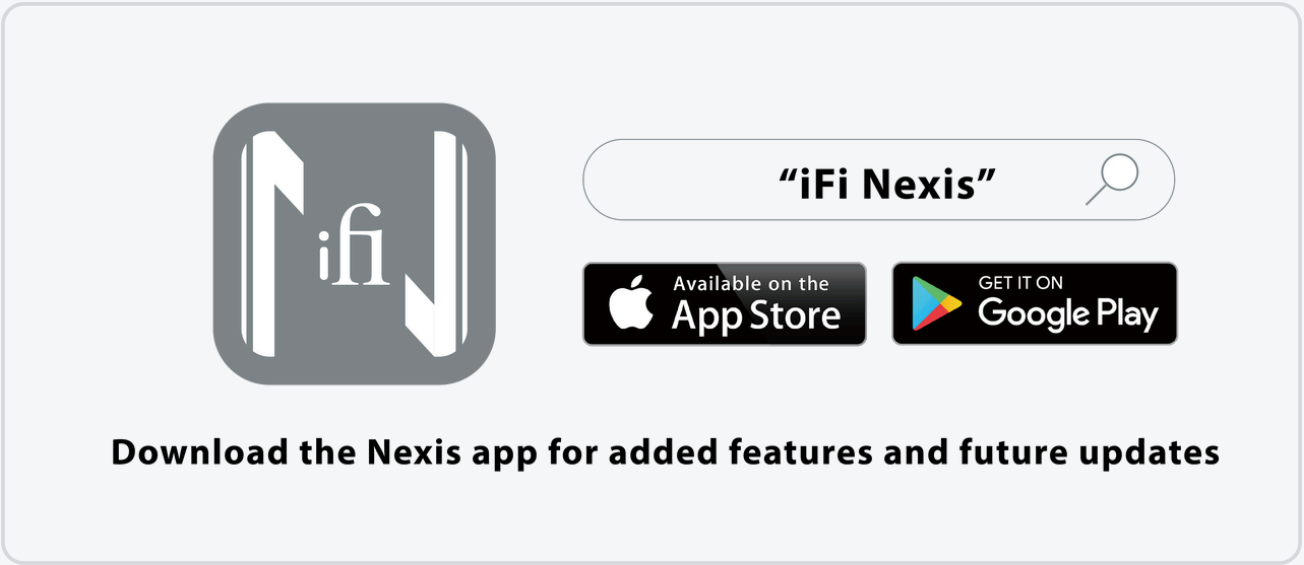

Please search for "iDSD Valkyrie" within the iFi Nexis app.

The iFi Nexis app helps you to use all the features and settings of the iDSD Valkyrie, such as OTA upgrades*, remote control** and more.

**OTA (Over-the-Air) technology enables automatic firmware updates via the network.*

***Provides users with a convenient and easy-to-use way to control their device as an alternative to the traditional remote control, for adjusting all the functions and settings of the iDSD Valkyrie more easily, conveniently and freely. The iFi Nexis app connects to it via Wi-Fi or Bluetooth (selectable in the app).*

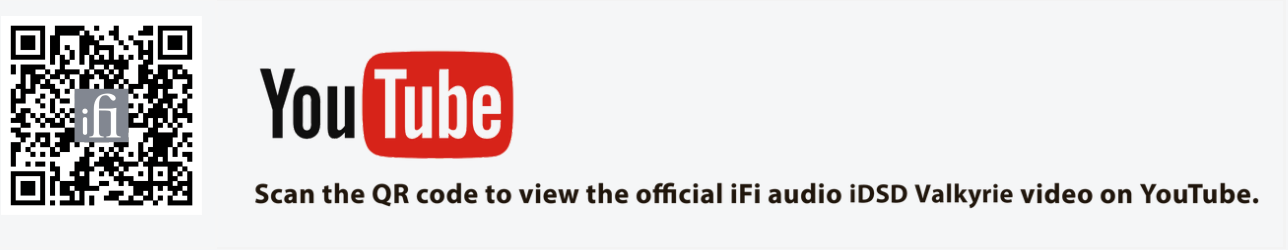

Cautions

1. Avoid extreme heat, cold and humidity.

2. Avoid dropping or crushing the iDSD Valkyrie.

3. If you experience discomfort or pain, try lowering the volume or temporarily discontinuing use.

4. To prevent possible hearing damage, do not listen at high volume levels for long periods.

5. Always check the actual output volume on your earphone, headphone, or loudspeakers before playing audio, as many music player software and operating systems do not appropriately apply industrial standards governing volume control (e.g., USB Device Class Definition for Human Interface Devices). If in doubt, before playing any music, turn off Volume Sync on the iDSD Valkyrie and bring the volume down to the lowest setting.

Prolonged Heat Exposure

Your iDSD Valkyrie may become very warm during normal use. It is important to keep it on a hard, stable, and well-ventilated work surface when in use.

Specifications

Digital stage	

Hi-res support	Native DSD512 with DSD1024 Remastering
	PCM 768kHz
Bluetooth formats	aptX Lossless, aptX Adaptive, aptX^, LDAC^, LHDC/HWA, AAC, SBC
Line stage	
Line output Level	
Balanced 4.4mm (fixed)	4.1V (200kΩ)
Single-Ended 3.5mm (fixed)	2.05V (100kΩ)
Single-Ended RCA (variable)	2.0V (100kΩ)
Single-Ended 3.5mm (variable)	2.0V (100kΩ)
SNR	
Balanced 4.4mm (fixed)	≥116dB(A) @ 0dBFS
Single-Ended 3.5mm (fixed)	≥114dB(A) @ 0dBFS
Single-Ended RCA (variable)	≥113dB(A) @ 0dBFS
Single-Ended 3.5mm (variable)	≥113dB(A) @ 0dBFS
DNR	
Balanced 4.4mm (fixed)	≥116dB(A) @ -60dBFS

Single-Ended 3.5mm (fixed)	≥114dB(A) @ -60dBFS
Single-Ended RCA (variable)	≥113dB(A) @ -60dBFS
Single-Ended 3.5mm (variable)	≥113dB(A) @ -60dBFS
THD+N	
Balanced 4.4mm (fixed)	≤0.002% (20-20kHz)
Single-Ended 3.5mm (fixed)	≤0.002% (20-20kHz)
Single-Ended RCA (variable)	≤0.003% (20-20kHz)
Single-Ended 3.5mm (variable)	≤0.003% (20-20kHz)
Output impedance	
Balanced 4.4mm (fixed)	≤205Ω
Single-Ended 3.5mm (fixed)	≤105Ω
Single-Ended RCA (variable)	≤100Ω
Single-Ended 3.5mm (variable)	≤100Ω
Headphone stage	
Headphone Outputs:	Balanced 4.4mm / S-Balanced* 3.5mm
Max.^ Output Power	

Balanced	>19.6V/640mW (@ 600Ω); >13.5V/5,700mW (@ 32Ω)
S-Balanced*	>9.8V/160mW (@ 600Ω); >8.9V/2,,475mW (@ 32Ω)
RMS Output Power	
Balanced	>12.0V/2,250mW (@ 64Ω)
S-Balanced*	>8.5V/2,258mW (@ 32Ω)
xMEMS	28Vpp (Balanced 4.4mm), 22Ω, 10-14V DC bias
Output impedance	
Balanced	≤0.3Ω, Enable iEMatch ≤2.2Ω
S-Balanced*	≤0.2Ω, Enable iEMatch ≤2.1Ω
SNR	
Digital Input	≥114dB(A) (Balanced 4.4mm/S-Balanced* 3.5mm)
Analogue 4.4mm Line Input	≥120dB(A) (Balanced 4.4mm/S-Balanced* 3.5mm)
Analogue 3.5mm Line Input	≥119dB(A) (Balanced 4.4mm/S-Balanced* 3.5mm)
DNR	
Digital Input	≥115dB(A) (Balanced 4.4mm/S-Balanced* 3.5mm)

Analogue Line Input	≥120dB(A) (Balanced 4.4mm/S-Balanced* 3.5mm)
THD+N	
Balanced	≤0.004% (Balanced @ 2.4V 16Ω) @ (20-20kHz)
S-Balanced*	≤0.004% (S-Balanced* @ 1.27V 16Ω) @ (20-20kHz)
Channel separation	
Balanced	≤-88dB (4V 1kHz @ 600Ω)
S-Balanced*	≤-88dB (2V 1kHz @ 600Ω)
General	
Gain:	0dB, 8dB and 16dB
Frequency Response (-3dB):	
Wireless	20Hz-41kHz (LDAC @ 990kbps)
Wired (Digital)	20Hz-90kHz @ USB and S/PDIF (Coaxial/Optical)
Wired (Analogue)	20Hz-46kHz (Balanced 4.4mm/SE 3.5mm)
Power consumption:	
Nitro	13W
Turbo	6.5W
Normal	3.5W

xMEMS	
Nitro	6.1W
Turbo	5.3W
Normal	4.6W
Battery:	Lithium-polymer 20,000mAh
Power System	Via USB-C charging compliant PD/QC3.0 20V, QC2.0 5V-12V fast charge protocol, power up to 24W compliant
Charging Time	8h (5V/2A) or 5h (9V/2A) or 4h (12V/2A) or 2.5h (20V/2A)
Dimensions	172 x 160 x 30mm (6.8" x 6.3" x 1.2")
Net weight	882 g (1.9 Ibs)
Limited warranty	12 months**

**Single-Ended Compatible Balanced*

***12 months typical or as permitted/required by local reseller laws.*

Specifications are subject to change without notice.

"K2 Technology" and "K2HD" are trademarks or registered trademarks of JVCKENWOOD Corporation.

See FAQ at ifi-audio.com for more information.

^LDAC and LDAC logo are trademarks of Sony Corporation.

Qualcomm aptX and Snapdragon Sound are products of Qualcomm Technologies, Inc. and/or its subsidiaries.

Qualcomm, Snapdragon and Snapdragon Sound are trademarks or registered trademarks of Qualcomm Incorporated. aptX is a trademark of Qualcomm Technologies International, Ltd.